COURSE DESCRIPTION

Course Name: DSP For Wireless Communications
Course Start Date: Jan 21, 2023, videos released weekly
Q&A Workshops: Sat Jan 28, Feb 4, 11, 18, 25 11am-1:30pm EST
Location: Zoom Webinar
Speaker: Dan Boschen

Pre-Recorded Videos combined with Live Q&A Workshops

This is a hands-on course providing pre-recorded lectures that students can watch **on their own schedule** and **an unlimited number of times** prior to live Q&A/Workshop sessions with the instructor. Ten 1.5 hour videos released 2 per week while the course is in session will be available for up to two months after the conclusion of the course. If a sufficient number of students sign-up, a second workshop session may be added earlier in the day for convenience to those in other time-zones. Workshop sessions are recorded and Dan is available via e-mail throughout the course to answer questions as well.

Course Summary

This course is a fresh view of the fundamental and practical concepts of digital signal processing applicable to the design of mixed signal design with A/D conversion, digital filters, operations with the FFT, and multi-rate signal processing. This course will build an **intuitive** understanding of the underlying mathematics through the use of graphics, visual demonstrations, and applications in GPS and mixed signal (analog/digital) modern transceivers. This course is applicable to DSP algorithm development with a focus on meeting practical hardware development challenges in both the analog and digital domains, and not a tutorial on working with specific DSP processor hardware.

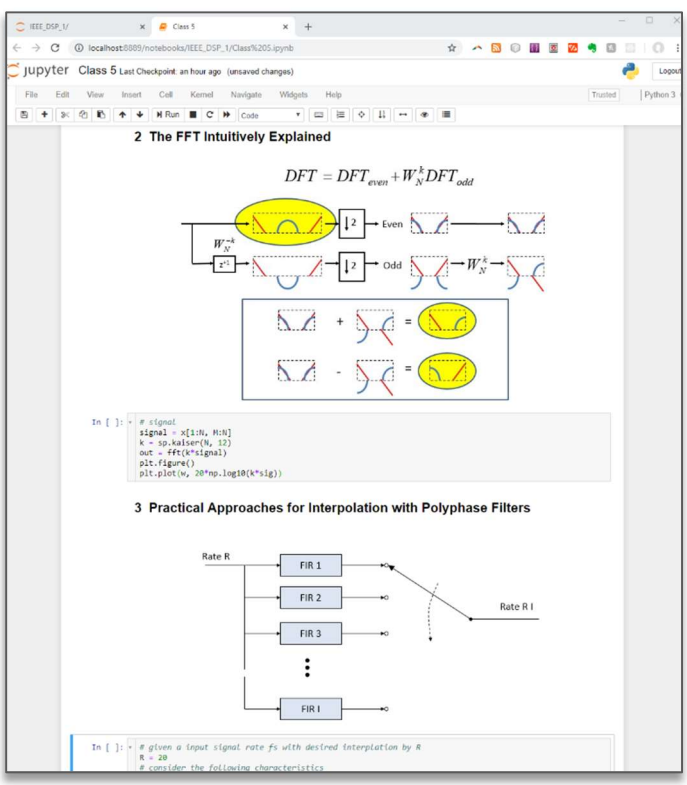

Jupyter Notebooks:

This long-running course now includes Jupyter Notebooks which incorporates graphics together with **Python simulation code** to provide a "take-it-with-you" interactive user experience. No knowledge of Python is required but the notebooks will provide a basic framework for proceeding with further signal processing development using that tools for those that have interest in doing so.

This course will not be teaching Python, but using it for demonstration. A more detailed course on Python itself is covered in a separate course also taught by Dan titled "Python Applications for Digital Design and Signal Processing".

Students will be encouraged but not required to load all the Python tools needed, and all set-up information for installation will be provided prior to the start of class.

Target Audience:

All engineers involved in or interested in signal processing applications. Engineers with significant experience with DSP will also appreciate this opportunity for an in-depth review of the fundamental DSP concepts from a different perspective than that given in a traditional introductory DSP course. Please contact Dan at boschen@loglin.com if you are uncertain about your background or if you would like more information on the course.

Benefits of Attending/ Goals of Course:

Attendees will build a stronger intuitive understanding of the fundamental signal processing concepts involved with digital filtering and mixed signal analog and digital design. With this, attendees will be able to implement more creative and efficient signal processing architectures in both the analog and digital domains. The knowledge gained from this course will have immediate practical value for any work in the signal processing field.

Topics / Schedule:

Pre-recorded lectures (3 hours each) will be distributed Friday prior to all Workshop dates. Workshop/ Q&A Sessions are 11am-1:30pm EST on the dates listed below (If a sufficient number of students sign up, an additional workshop will be added for an earlier time in the day as an option for those in other time zones):

Saturday, January 21, 2023

Course Kick-off and Orientation: 30-minute meeting to go over getting started with the course.

Saturday, January 28, 2023

Class 1: Correlation, Fourier Transform, Laplace Transform

Saturday, February 4, 2023

Class 2: Sampling and A/D Conversion, Z –transform, D/A Conversion

Saturday, February 11, 2023

Class 3: IIR and FIR Digital filters, Direct Fourier Transform

Saturday, February 18, 2023

Class 4: Windowing, Digital Filter Design, Fixed Point vs Floating Point

Saturday, February 25, 2023

Class 5: Fast Fourier Transform, Multi-rate Signal Processing, Multi-rate Filters

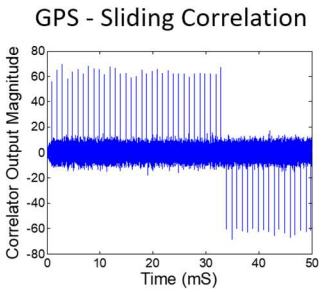

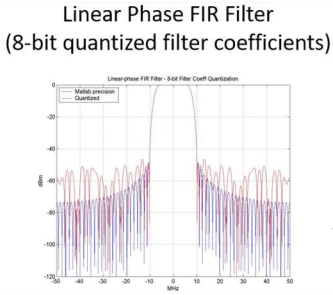

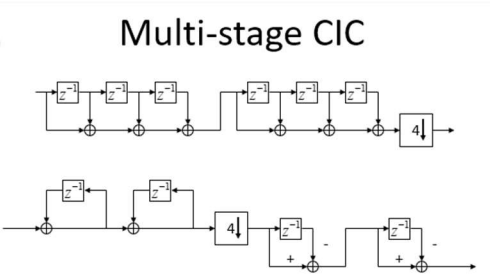

Speaker's Bio:

Dan Boschen has a MS in Communications and Signal Processing from Northeastern University, with over 25 years of experience in system and hardware design for radio transceivers and modems. He has held various positions at Signal Technologies, MITRE, Airvana and Hittite Microwave designing and developing transceiver hardware from baseband to antenna for wireless communications systems and has taught courses on DSP for over 15 years. Dan is a contributor to dsprelated.com and Signal Processing Stack Exchange dsp.stackexchange.com/, and is currently at Microchip (formerly Microsemi and Symmetricom) leading design efforts for advanced frequency and time solutions.

For more background information, please view Dan's Linked-In page at: http://www.linkedin.com/in/danboschen